Angle support leg W2-Aluminium (13 mm panel thickness)

Technical facts

Support foot:	Steel galvanised or stainless steel (additional charge) M10 x 45 (including clip-on nylon plate)
Support with angle:	Aluminium anodised – Ø 18 mm with angle Aluminium powder-coated – Ø 18 mm with angle Support length: 110 mm (150 mm ground clearance)
Short shaft and flat rosette:	Aluminium anodised for type W2.4
Rosette with short shaft:	Nylon (11 colours – find colour chart enclosed) for type W2.1 and W2.3
Panel fixation:	Screws DIN7983 4,8 x 16 stainless steel (2 pieces)

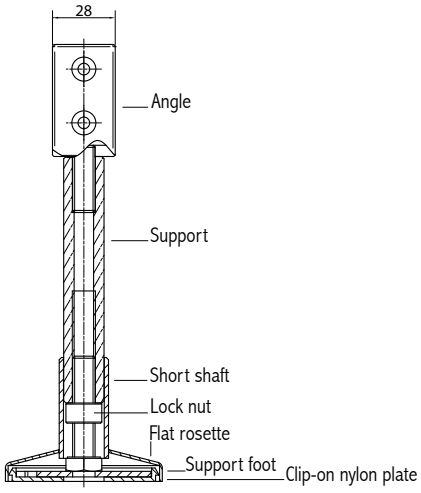

Representation W2.4

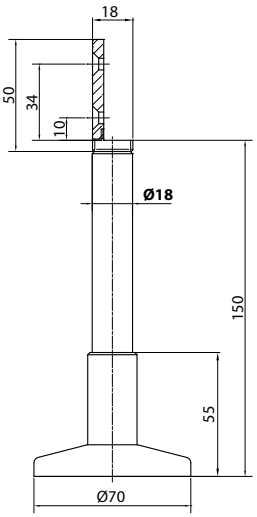

Prices for 150 mm and 100 mm ground clearance.

Article	Description	Order number
W2.1/13	Complete support leg (support: aluminium anodised, short shaft rosette: nylon)	81W2113_ _ _ _ (Please specify RAL no.!)
W2.3/13	Complete support leg (support: aluminium powder-coated, short shaft rosette: nylon)	81W2313_ _ _ _ (Please specify RAL no.!)
W2.4/13 raw	Complete support leg (support, flat rosette and short shaft: aluminium raw)	81W24130
W2.4/13	Complete support leg (support, flat rosette and short shaft: aluminium anodised)	81W2413
Additional charge	Support foot in stainless steel	MP81GFES
Additional charge	Excess- and Short length aluminium support (up to 200 mm ground clearance)	MP81RUUEV

Notes