Central locking system for changing cubicles

Technical facts

Type:	WKZV aluminium anodised
Design:	Mounted locking levers 142 mm on a rotating axis for assembly below a shelf or bench (2 pieces included) Lever adjusters in plastic black (big or small) incl. screw and screw cover (2 pieces included) Outer flat rosettes incl. integrated indicator (red/green) for inwards opening doors (2 pieces included) Clear cubicle width up to 1250 mm
Locking type:	Simultaneous locking of both doors through operation of one locking lever
Emergency release:	Hexagon socket (stainless steel)
Door thickness:	13/28/30 mm

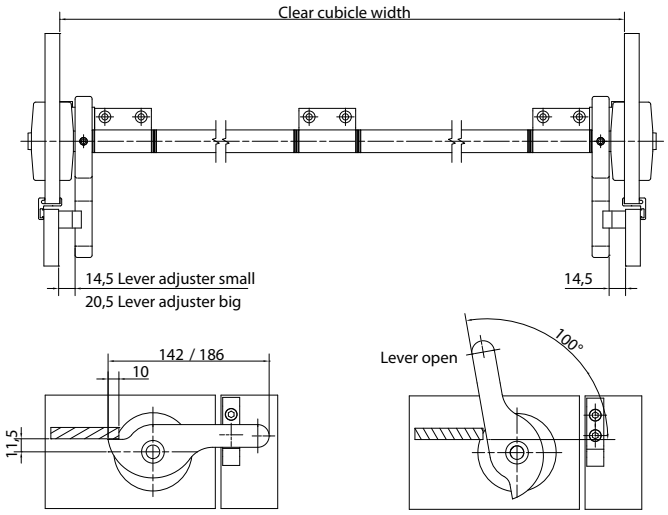

Article	Description	Order number
WKZV	Central locking system aluminium anodised	82WKZV142*
Additional charge	Clear cubicle width up to 1500 mm	MP82WK15
Additional charge	Clear cubicle width up to 2000 mm	MP82WK20
Additional charge	Locking lever 186 mm	MP82WK186
Additional charge	Emergency release key for hexagon socket SW7	MP82SW7
Additional charge	Outer rosettes aluminium powder-coated (11 colours - colour chart enclosed)	MP82WKFL_ _ _ _ (Please specify RAL no.!)
Additional charge	Outer rosettes ground stainless steel	MP82WKFLES
Additional charge	Ball holder	MP82KUH

Special design possible on request.

*Please provide information about the thickness of the door leaf/panel with your order.

Notes