# Stainless steel butt hinge SYS-ES13-12/3

## Technical facts

| | |
|---|---|
| Size: | 120,0 mm |
| Knuckle diameter: | 17 mm |
| Hinge pin diameter: | 12 mm |
| Hinge pin: | Stainless steel |
| Spring core: | Sleeve: brass, Spring: spring steel<br>Stainless steel spring (additional charge) |
| Recommended fixation: | Door leaf (directly): counter-sunk screw M5 x 10<br>with hexagon socket (2 pieces included) |
| Packing unit: | 10 hinges |

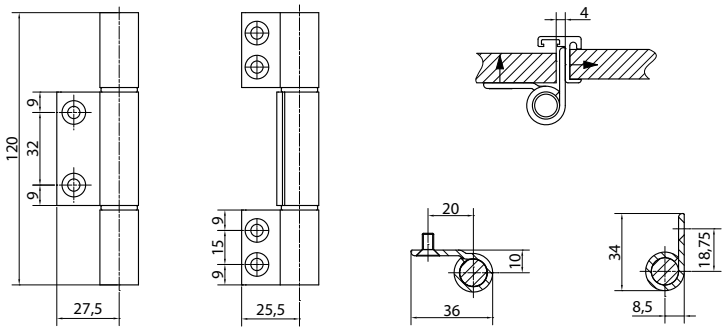

## Tender specification

SYSKO-Stainless steel butt hinge Type: SYS-ES13-12/3 for unrebated partition walls
3-parts butt hinge for fixation to door leaf without cutout
Hinge surface ground stainless steel
Available as standard hinge (ES13-12/3S) or spring hinge (ES13-12/3F)

| Article | Description | Order number |
|---|---|---|
| ES13-12/3S<br>DIN L | Standard hinge<br>ground stainless steel | 84ES13123SL |
| ES13-12/3S<br>DIN R | Standard hinge<br>ground stainless steel | 84ES13123SR |
| ES13-12/3F<br>DIN L | Spring hinge<br>ground stainless steel | 84ES13123FL |
| ES13-12/3F<br>DIN R | Spring hinge<br>ground stainless steel | 84ES13123FR |
| Additional<br>charge | Sleeve: brass, Spring: stainless steel | MP84FKFES120 |

**Notes**